Instruction Manual

30-0352
TRU-BOOSTX
Boost Controller Gauge

STOP! - READ THIS BEFORE INSTALL OR USE!

WARNING:
THIS INSTALLATION MAY REQUIRE WELDING OR INTEGRATION INTO A VEHICLE'S ELECTRICAL SYSTEM. DAMAGE TO SENSITIVE ELECTRONICS, FIRE, OR EXPLOSION MAY OCCUR IF PROPER PRECAUTION IS NOT TAKEN. IF THERE IS ANY DOUBT, **DO NOT** ATTEMPT THE INSTALLATION AND CONSULT A PROFESSIONAL. **NOTE**: IT IS THE RESPONSIBILITY OF THE ENGINE TUNER TO ULTIMATELY CONFIRM THE CALIBRATION USE FOR ANY PARTICULAR ENGINE IS SAFE FOR ITS INTENDED USE. AEM HOLDS NO RESPONSIBILITY FOR ANY ENGINE DAMAGE THAT RESULTS FROM THE MISUSE OF THIS PRODUCT.

THIS PRODUCT HAS LEGAL RESTRICTIONS. READ THIS BEFORE INSTALL OR USE!

THIS PRODUCT MAY BE USED SOLELY ON VEHICLES USED IN SANCTIONED COMPETITION WHICH MAY NEVER BE USED UPON A PUBLIC ROAD OR HIGHWAY, UNLESS PERMITTED BY SPECIFIC REGULATORY EXEMPTION. (VISIT THE "EMISSIONS" PAGE AT HTTP://WWW.SEMASAN.COM/EMISSIONS FOR STATE BY STATE DETAILS.) IT IS THE RESPONSIBILITY OF THE INSTALLER AND/OR USER OF THIS PRODUCT TO ENSURE THAT IT IS USED IN COMPLIANCE WITH ALL APPLICABLE LAWS AND REGULATIONS. IF THIS PRODUCT WAS PURCHASED IN ERROR, DO NOT INSTALL AND/OR USE IT. THE PURCHASER MUST ARRANGE TO RETURN THE PRODUCT FOR A FULL REFUND. THIS POLICY ONLY APPLIES TO INSTALLERS AND/OR USERS WHO ARE LOCATED IN THE UNITED STATES; HOWEVER CUSTOMERS WHO RESIDE IN OTHER COUNTRIES SHOULD ACT IN ACCORDANCE WITH THEIR LOCAL LAWS AND REGULATIONS.

The AEM Tru-BoostX Controller Gauge is a stand-alone boost controller that features a four-digit central readout with 24 sweeping LED's, providing immediate reference to the boost reading in real-time. An AEMnet (CAN bus) output is included and can be used with AEM devices such as the Dash Displays.

Features

- 2-1/16" / 52mm outer diameter mounting
- On-board pressure sensor, measures up to 80 PSIg
- Locking connector
- Supports vehicle / system voltages up to 16V
- Auto-dimming display
- Displays both vacuum and boost
- Three programmable boost settings (high boost, low boost, and scramble boost)
- Three operating modes (A, B, and OFF)
- Two over-boost alarm feature
- One negative-active lowside output for external alarm lamp
- One negative-triggered input for scramble boost activation
- One AEMnet (CAN bus) output
- Peak boost recall feature
- Programmable display units (PSIg, BAR, and KPg)
- Programmable LED scale
- Programmable waste-gate opening hold-off pressure
- Black bezel / "Boost" faceplate supplied; Silver / white available as optional purchase

	KIT CONTENTS
PN	**Description**
10-4352	INST, X-SERIES TRU BOOST GAUGE
35-4352	GAUGE ASSY, X-SERIES TRU BOOST
35-4303	INSTALL KIT
35-8618	NUT, KNURLED, M4x0.7 (2)
35-8614	BRACKET, X-SERIES GAUGE
35-3447	HARNESS, TRU BOOST CONTROLLER
35-8617	RUBBER BAND, X-SERIES GAUGE
35-2400	BOOST CONTROL SOLENOID
35-2401	BOOST CONTROL MUFFLER
35-2152	1/8 NPT MALE TO -4 MALE ADAP (2)
35-2153	1/8 NPT MALE TO 3/16 BARB ADAP (2)
8-158	ADAPTER, 1/8" HOSE TO 1/8" NPT
8-161-120	VACUUM HOSE, 7/64" X 120"

OPTIONAL ACCESSORIES	
PN	**Description**
30-0352-ACC	BEZEL, X-SERIES GAUGE SILVER FACEPLATE, X-SERIES TRU BOOST WHITE

AEM Performance Electronics, 2205 126th Street Unit A, Hawthorne, CA 90250 - Phone: (310) 484-2322
http://www.aemelectronics.com

Gauge Installation

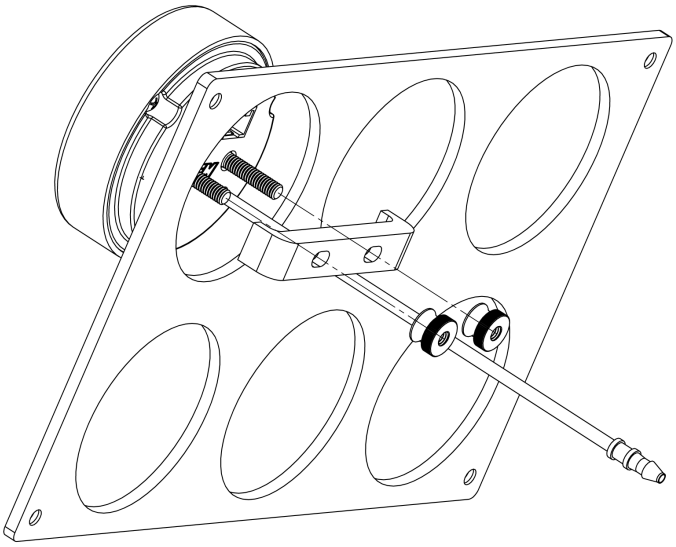

Installation using supplied bracket

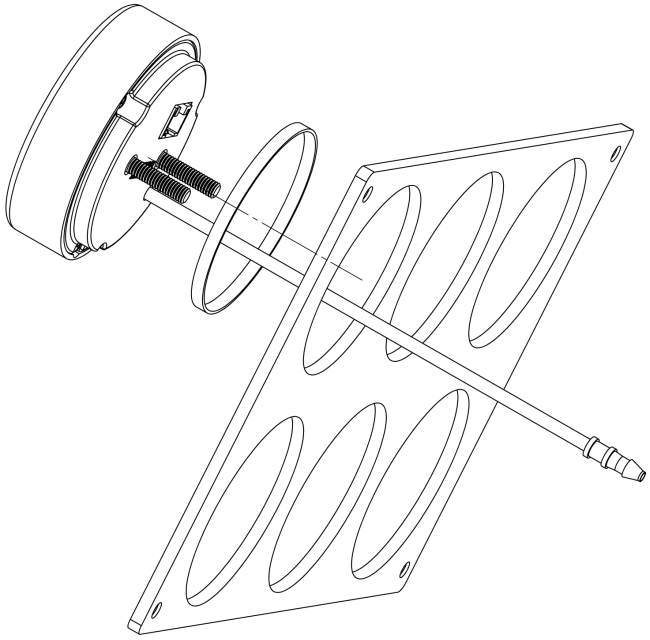

Installation without bracket, using rubber band

A 2-1/16" (52mm) hole is required to mount the X-Series gauge. A bracket and thumbscrews are provided to facilitate installation into a panel or gauge pod. In some cases, the gauge cup may be pushed into a mounting hole causing an interference fit strong enough to retain the gauge; the supplied rubber band may be fit to the gauge to create a tighter fit in mounting holes slightly larger than 52mm. It is, however, recommended that gauges be mounted securely using the supplied bracket to ensure they never become loose and cause a hazard during vehicle operation. The gauge panel above is for illustrative purposes only, it is not supplied.

Note: The gauge is not water-proof and should not be installed in a location with exposure to water or snow. Damage caused by water ingress will not be covered under warranty.

Refer to the Wiring Installation Diagram for details on how to connect the gauge harness to the vehicle. Then, connect the cable to the gauge. The connector will only fit one way. In addition, the boost hose protruding from the back of the gauge is connected to the onboard pressure sensor. The manifold boost hose must be connected to the manifold for the controller to work properly. Connect the manifold boost hose to manifold using the supplied tubing and 1/8" NPT barb or an existing manifold pressure port.

Note: Do not pull on the boost hose as physical damage may occur.

© 2019 AEM Peformance Electronics

Wiring Installation Diagram

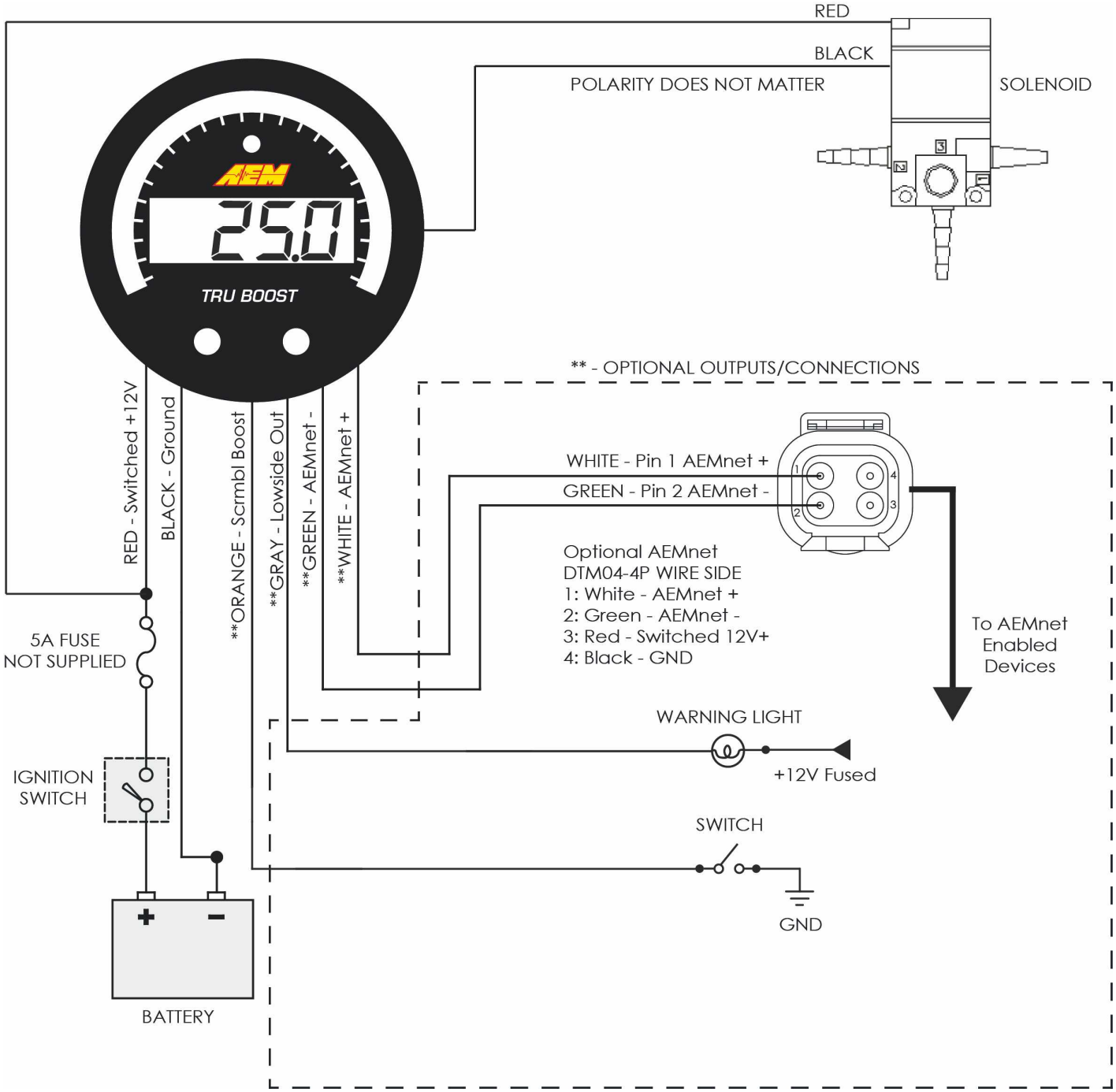

© 2019 AEM Peformance Electronics

Gauge Connections

The X-Series Tru-BoostX Controller Gauge is supplied with a Power/IO harness; the harness is connected to the gauge as shown below. The Power/IO harness will require further integration into the vehicle. The minimum Power/IO connections required to operate the gauge are switched 12V (5A fuse) and ground. The boost solenoid and hose need to be connected as well. Please reference the diagrams and information on the provided for further detail.

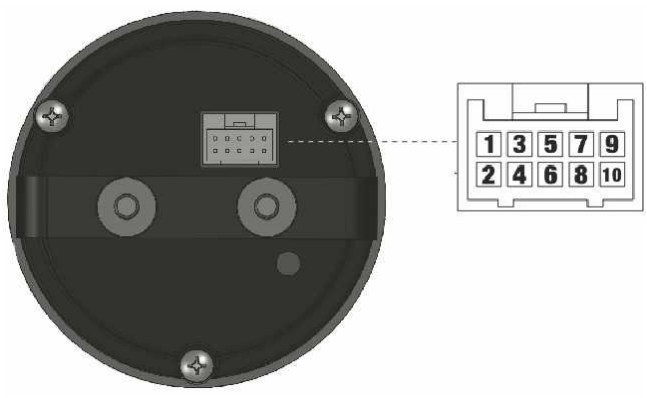

Connector A - Power / IO

Pin	Color	Description
1	RED	Switched 12V Power (5A Fuse)
2	BLACK	Power Ground
3	GREEN/BLACK	AEMnet- / CANL (Optional)
4	WHITE/BLACK	AEMnet+ / CANH (Optional)
5	ORANGE	Scramble Boost (Optional)
6 - 8	-	Not Used
9	BLACK	Boost Solenoid Output Negative-
10	GRAY	Alarm Lowside Output Negative- (Optional)

Important Notes on Wiring

- Route harnesses carefully to avoid chafing or undue strain.
- Apply strain reliefs and wire coverings as necessary (not included).
- Secure wiring to vehicle with wire ties (not included)
- Use a 5A inline fuse on the switched 12V power supply line (Pin 1 - Power/IO).
- Match the existing wire gauge when extending wires.
- Ensure all connections are secure and insulated from shorts to adjacent wires and the vehicle structure. Utilize proper crimping and solder/heat-shrink techniques.
- Replacement pins are JST P/N SPUD-001T-P0.5 terminals for 22-26 AWG wire.

© 2019 AEM Peformance Electronics

Boost Solenoid Installation

When energized, ports 1 & 2 are connected, when de-energized, ports 2 & 3 are connected. The port numbers are clearly noted on the solenoid body. See the diagrams below for plumbing instructions.

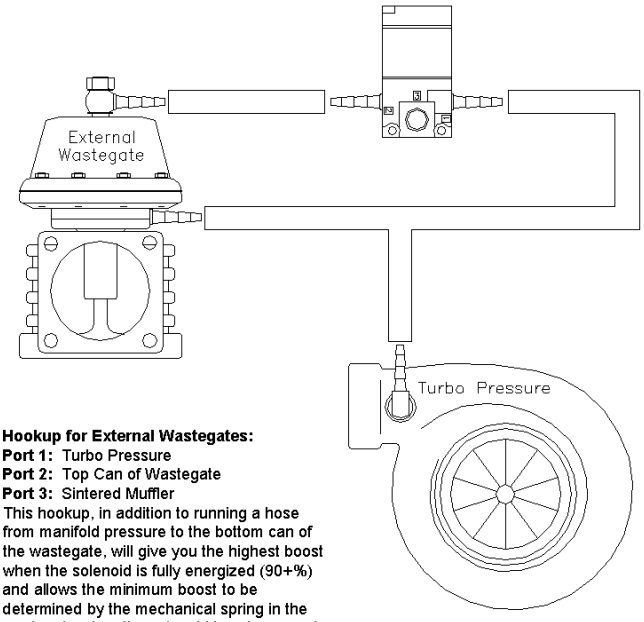

Hookup for External Wastegates:
Port 1: Turbo Pressure
Port 2: Top Can of Wastegate
Port 3: Sintered Muffler
This hookup, in addition to running a hose from manifold pressure to the bottom can of the wastegate, will give you the highest boost when the solenoid is fully energized (90+%) and allows the minimum boost to be determined by the mechanical spring in the wastegate when the solenoid is not powered (0-10% duty) .

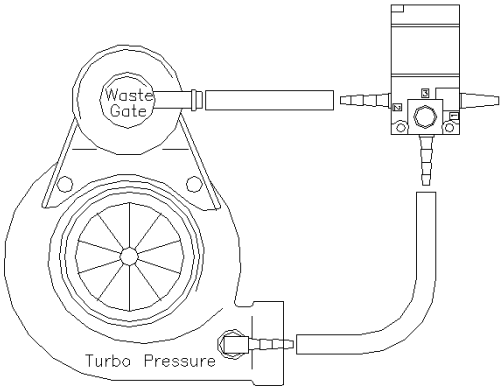

Hookup for Internal Wastegates:
Port 1: Sintered Muffler
Port 2: Wastegate
Port 3: Turbo Pressure
This hookup, with no additional hoses required, will give you the highest boost when the solenoid is fully energized (90%) and allows the minimum boost to be determined by the mechanical spring in the wastegate when the solenoid is not powered (0-10% duty).

© 2019 AEM Peformance Electronics

Operation

The inner numeric LEDs and outer ring LEDs display the currently measured manifold pressure; the outer LEDs will flash when the sensor reading exceeds the (configurable) warn/alarm threshold value. Button A and button B are located on the face of the gauge and are used to configure the boost controller gauge.

Select operating mode (A, B, OFF)

- The gauge should be in its run mode, showing the current sensor reading
- Depress and hold the A button for three seconds until the next mode appears
- Repeat until the desired mode is selected
- Select mode A to use the boost setting A
- Select mode B to use the boost setting B
- Select mode OFF to disable the boost solenoid
- The gauge will return to run mode shortly after the last button press
- Press the A button and the current mode will be displayed

Display peak value

- The gauge should be in its run mode, showing the current sensor reading
- Press the B button; the peak (highest) sensor reading will be displayed after "HI" is displayed
- The peak value will be reset to zero after every power cycles
- The gauge will return to run mode shortly after the last button press

Clear stored peak value

- The gauge should be in its run mode, showing the current sensor reading
- Depress and hold the B button for three seconds until "CLr" appears to clear the peak value

  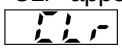

  Will be displayed to confirm the peak value has been reset
- The gauge will return to run mode shortly after the last button press

Enter quick setup menu

- The gauge should be in its run mode, showing the current sensor reading
- Depress and hold the A and B button together for three seconds until "PRG" appears
- Press the A button; boost setting A and the current manifold pressure will be displayed alternatively. Once the manifold pressure is over one PSI, only the current manifold pressure is displayed.
- Set the output duty cycle (10%-90%) for mode A.
- Use the A button to decrease the value and use the B button to increase the value
- Press the A and B button together for one second to move on to boost setting B. Boost setting B and the current manifold pressure will be displayed alternatively. Once the manifold pressure is over one PSI, only the current manifold pressure is displayed.
- Set the output duty cycle (10%-90%) for mode B.
- Press the A and B button together for one second to return to run mode

Enter full setup menu

- The gauge should be in its run mode, showing the current sensor reading
- Depress and hold the A and B button together for three seconds until "PRG" appears
- Depress and hold the A and B button together once more for three seconds until "UNIT" appears
- Use the A button to decrease the value and use the B button to increase the value of the desired settings
- Press the A and B button together for one second to move on to the next setting
- To exit, continue the setup until the run mode is reached

Menu Options:

Change display units

- The gauge should be in setup mode alternating between "Unit" and the current unit setting
- Select from PSIg ("PSI"), Bar ("bAr"), and Kpg ("PAS").

Change scramble boost duty cycle

- The gauge should be in setup mode alternating between "SCb" and the current duty cycle setting
- Set the output duty cycle (10%-90%) for the scramble boost feature. The Tru-BoostX controller will output the selected duty cycle when the scramble boost input is grounded.

© 2019 AEM Peformance Electronics

Change scramble time

- The gauge should be in setup mode alternating between "SCt" and the current time setting
- Select the duration of time (0-25.5 seconds) the Tru-BoostX controller will output the scramble boost duty cycle when the scramble boost input is grounded.

Change alarm pressure

- The gauge should be in setup mode alternating between "ALA" and the current pressure setting
- Set the boost pressure at which the alarm will activate. When the alarm is activated, the LEDs will flash and the warning light output (gray wire) is pulled to ground.

Change wastegate crack pressure

- The gauge should be in setup mode alternating between "oPP" and the current pressure setting
- Set the boost pressure at which the wastegate starts to open. The Tru-BoostX controller will keep the boost solenoid open from one PSI until the boost exceeds the selected value. This value can be adjusted to reduce lead in boost spikes or reduce spool up time. It is recommended that this setting is set 2-3 PSI below the actual crack pressure.

Change display full scale

- The gauge should be in setup mode alternating between "FULL" and the current scale setting
- Set the full-scale value of the sweeping LED lights. The LED lights start at 0 PSIg and stop at the full-scale value, increasing in twenty-four equal increments.

Change boost setting A

- The gauge should be in setup mode alternating between boost setting A and the current manifold pressure. Once the manifold pressure is over one PSI, only the manifold pressure is displayed.
- Set the output duty cycle (10%-90%) for mode A. When in mode A, this is the duty cycle the Tru-BoostX controller will output.

Change boost setting B

- The gauge should be in setup mode alternating between boost setting B and the current manifold pressure. Once the manifold pressure is over one PSI, only the manifold pressure is displayed.
- Set the output duty cycle (10%-90%) for mode B. When in mode B, this is the duty cycle the Tru-BoostX controller will output.
- Press the A and B button together for one second to return to the run mode.

Setup Menu Tree

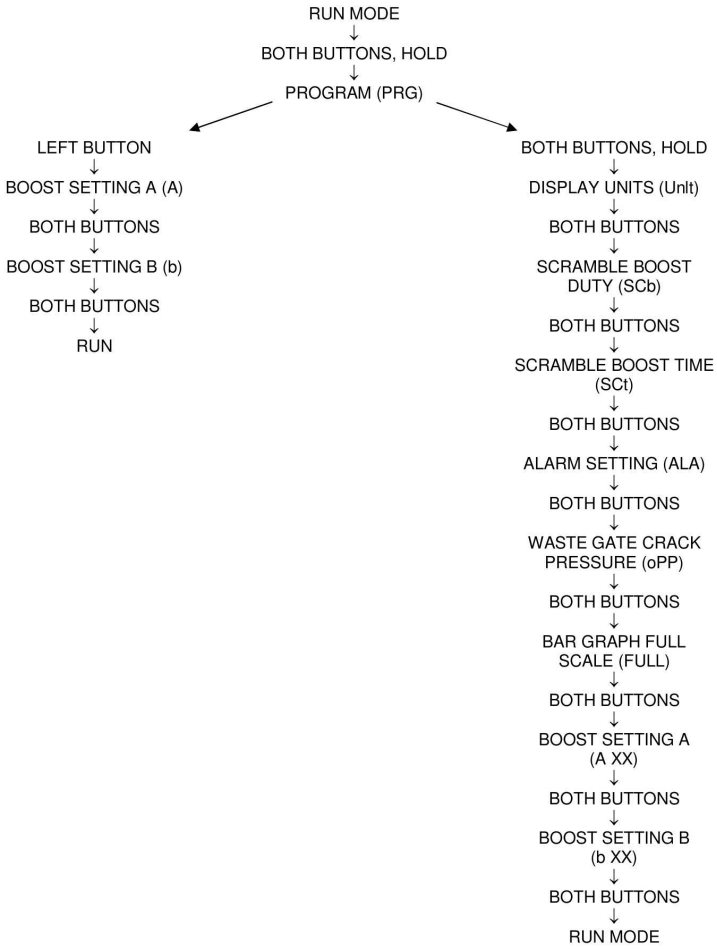

© 2019 AEM Peformance Electronics

How It Works

Turbo Boost Control

In a turbo-charged application, the wastegate varies the amount of exhaust gases to the exhaust turbine. Thus, the wastegate essentially regulates the amount of boost produced by the turbocharger. Typically, the wastegate has an internal spring that is preset to open at a certain pressure commonly known as the Wastegate Crack Pressure or Spring Pressure. Boost pressure is supplied to the wastegate as a reference. When the boost pressure exceeds the wastegate crack pressure, the wastegate vents excess exhaust gases, effectively reducing the boost output. With no pressure to the wastegate, the wastegate is shut and the turbo continues to build boost. By adding a boost solenoid, the wastegate boost pressure reference can be manipulated electronically to change the turbocharger boost output. The boost solenoid is configured in a way that if the boost control is disabled, the wastegate operates at the default spring pressure.

Pulse Width Modulation (PWM)

The technique used to control the boost solenoid is Pulse Width Modulation commonly known as PWM. The Tru-BoostX controller is configured to pulse the boost solenoid at a frequency of 30 Hertz. The solenoid is driven high and low rapidly and the duty cycle is used to specify the duration of time the boost solenoid is held open. Using this approach, the solenoid emits a buzzing sound.

Duty Cycle

Each time period or cycle has two component, on-time and off-time. Duty cycle is the percentage of on-time. Adjusting the duty cycle allows the solenoid to bleed more or less air from the wastegate boost pressure reference port. Remember, venting all the air from the wastegate means it will allow the turbo to build maximum boost.

More Duty = More Boost

To understand how the solenoid becomes a variable air flow restricting valve to meet a specific wastegate position, note the following duty cycle signal examples.

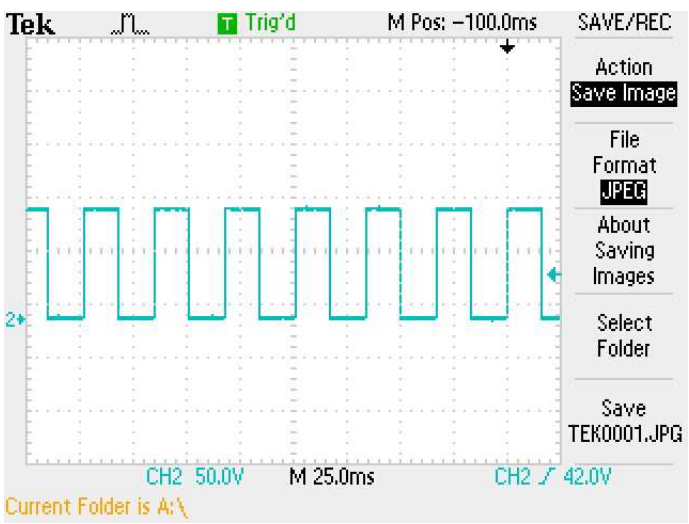	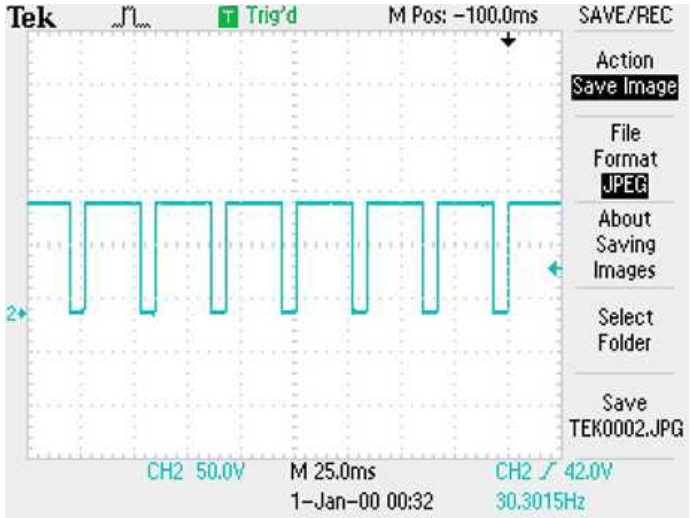
The oscilloscope trace above shows a 30Hz, 50% duty cycle signal coming from the controller. The solenoid will be ON when the signal is low and OFF when the signal is high.	The oscilloscope trace above shows a 30Hz, 20% duty cycle signal. The solenoid will be ON when the signal is low (20% of the time) and OFF when the signal is high (80% of the time).

Correlating Duty Cycle and Boost Pressure

The boost controller has no idea how much duty is required to achieve a specific amount of boost. Since, each turbo-charged application will be different, the boost controller has to be tuned so that the boost controller will know how much duty cycle will create the target boost.

© 2019 AEM Peformance Electronics

Limitations
The boost solenoid is not usable at any duty less than 10%. Thus, at 10% the boost solenoid is considered off. Likewise, maximum on duty is capped at 90%. In addition, the minimum and maximum boost created is also limited by either the wastegate or the turbocharger itself. Upgrading the wastegate and/or turbocharger may be required to achieve the desired boost level the current setup cannot provide.

Using the Tru-BoostX controller gauge

The Tru-BoostX controller must be tuned for the specific application. Setup the gauge through the setup menu. Tune the boost controller by adjusting boost setting A and B, as well as the scramble boost setting (if used) until the desired pressure is achieved under load. The quick setup menu is perfect for quickly adjusting the duty cycle. The Wastegate Crack Pressure (oPP) setting may be adjusted to reduce lead in boost spikes or reduce spool up time. It is recommended that this setting is set 2-3 PSI below the actual crack pressure.

Once tuned, choose a running mode (A, B, or OFF). In all modes, the sweeping LEDs will not illuminate when manifold pressure is less than 0 PSIg. In mode A, the gauge will output the duty cycle selected for boost setting A. The gauge will output the duty cycle selected for boost setting B when in mode B. In the "OFF" mode, the solenoid output is turned off. Press and hold the left button for three seconds to change run modes. The order of run modes is shown in the menu tree below. The gauge also remembers the peak boost level achieved. Press the B button to display the peak boost. Press and hold the B button for three seconds to clear the peak boost value.

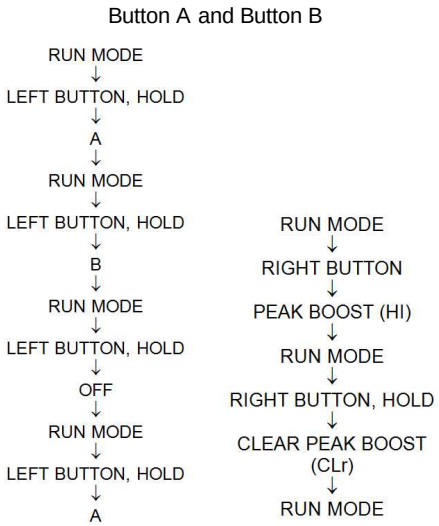

Scramble Boost
Scramble boost is a feature that allows the driver to momentarily change the duty cycle output of the Tru-BoostX controller. The output duty cycle for the scramble boost is set in the scramble boost (SCb) option. The scramble boost duration is set by the scramble boost time (SCt) option. Scramble boost is activated by grounding the orange scramble boost input wire.

Alarm
All 24 outer LEDs will flash if manifold pressure exceeds the alarm value (ALA) for more than 1 second. The low side driver output will also switch to ground. The LEDs will continue to flash and the output will stay grounded until either button is pushed or the gauge is turned off.

Over-Boost
The boost solenoid will shut off, all 24 outer LEDs will flash and the center digits will display "Ob" if manifold pressure exceeds the alarm value by 10% for more than 1 second or if manifold pressure exceeds the alarm level by 20% for more than 200 milliseconds. The solenoid will remain off and the LEDs will continue to flash until either button is pushed or the gauge is turned off.

Error Detection
ErS- If the boost solenoid is shorted or disconnected, the LEDs will flash and the center digits will display “ErS”. The error code will not activate when the Tru-BoostX is in the off mode. Note: The solenoid always has a small PWM signal to allow for fault detection.

© 2019 AEM Peformance Electronics

Faceplate / Bezel Installation

The gauge kit is supplied assembled with a black faceplate and black bezel. An accessory kit is available (for purchase through AEM dealers) which includes an optional silver bezel and white faceplate. Please reference the Optional Accessories section earlier in the document for the appropriate part numbers. Contact your dealer or visit www.aemelectronics.com for more information.

The faceplate is not reversible. Dis-assembly is required to change the faceplate or change the bezel of the gauge. The following diagram will provide familiarization with the major components of the gauge prior to beginning the procedure.

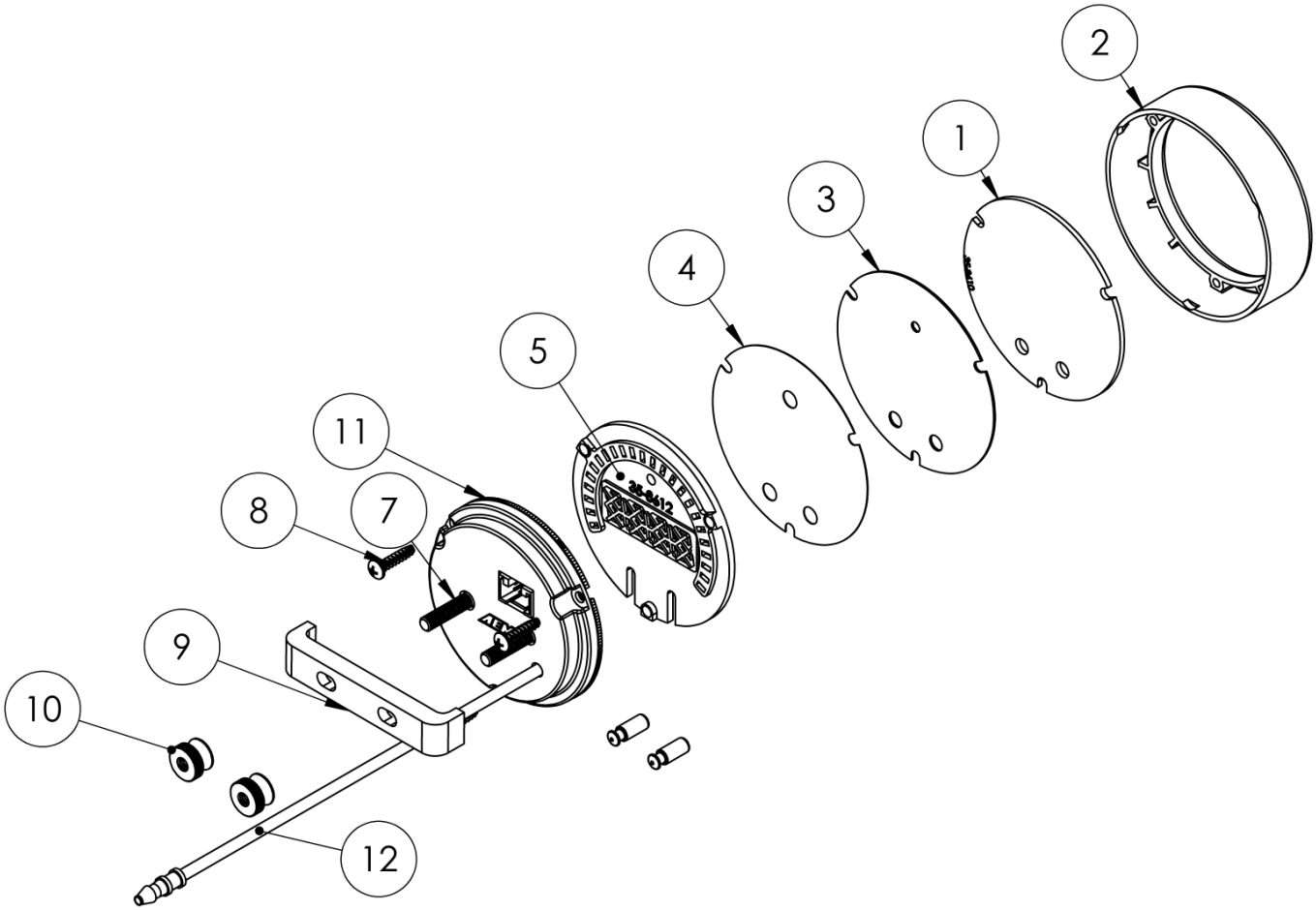

Item	Qty	Description
1	1	Lens
2	1	Bezel
3	1	Faceplate
4	1	Diffuser
5	1	Light Guide
6	2	Button
7	1	Cup w/ Mounting Stud (M4 x 0.7)
8	3	Assembly Screw
9	1	Mounting Bracket
10	2	Brass Thumb Screw (M4 x 0.7)
11	1	Printed Circuit Board (PCB)
12	1	Manifold Boost Hose

© 2019 AEM Peformance Electronics

Gauge Disassembly

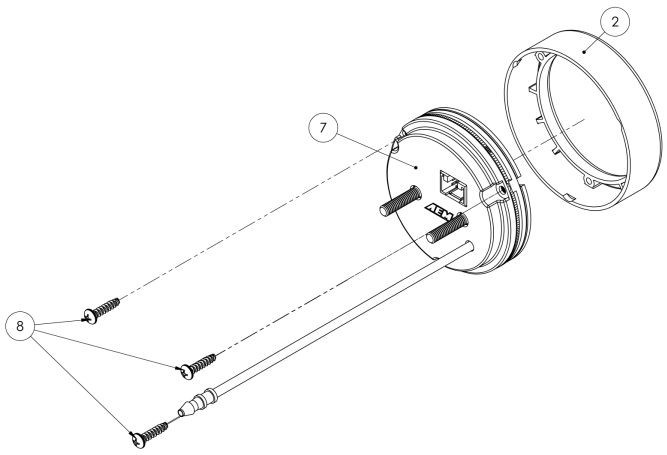

STEP 1 - Remove the three assembly screws (8) using a #1 Phillips head screwdriver. Separate the bezel (2) and cup (7) from the rest of the assembly. If you have purchased the optional accessory kit, the silver bezel may be replaced for the existing bezel at this time.

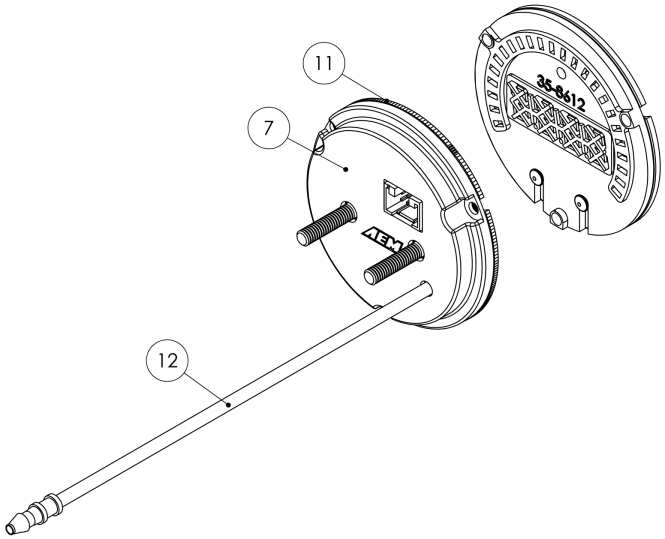

STEP 2 - Separate the PCB (11) and cup (7) from the remaining components. *Under no circumstance attempt to detach the manifold boost hose (12) from the PCB!

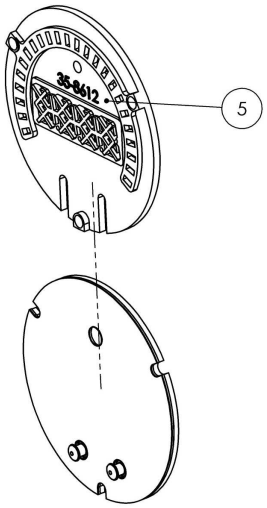

STEP 3 - Slide the light guide (5) upward to remove it, the buttons may fall out at this time - take care not to lose them.

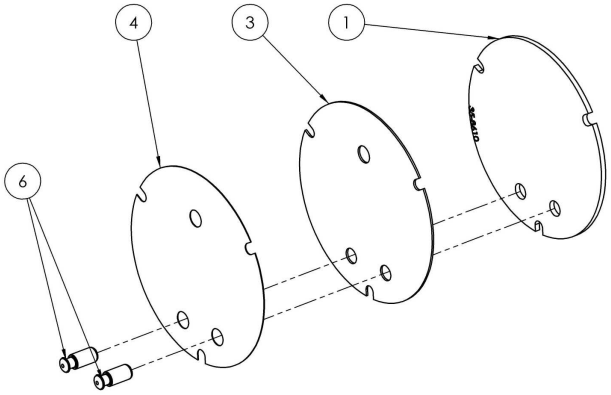

STEP 4 - As you separate the remaining components, diffuser (4), faceplate (3), lens (1), note the order in which they were assembled. The faceplate (3) may now be replaced for a different color as included in the optional accessory kit.

© 2019 AEM Peformance Electronics

Gauge Assembly

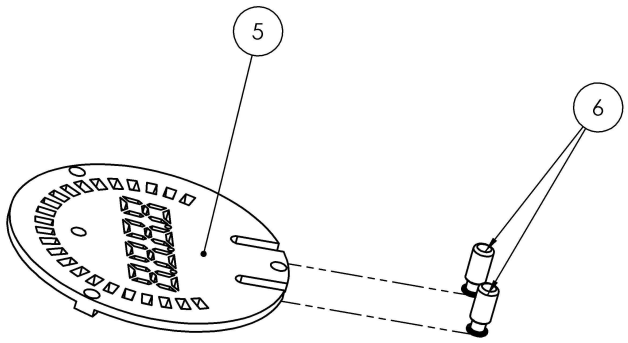

STEP 1 - Place the light guide (5) on a flat surface (black side up) and slide the buttons (6) into the slots.

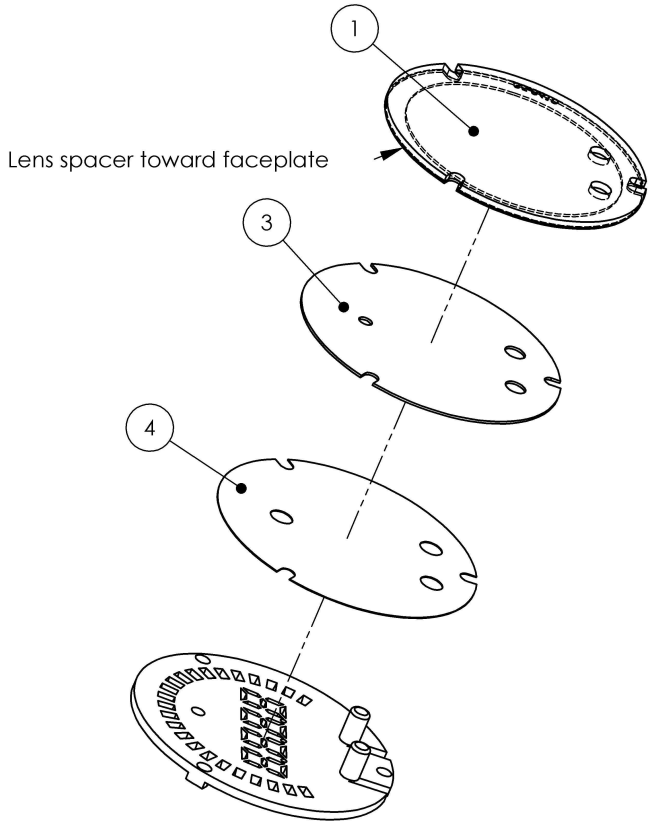

STEP 2 - Stack the diffuser (4), faceplate (3), and lens (1) in order, over the buttons, and on to the light guide.

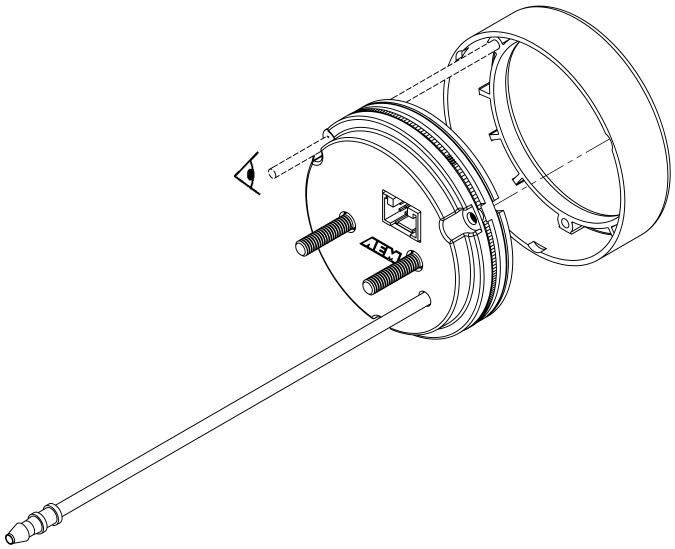

STEP 3 - Reassemble the PCB and display stack with the bezel, making sure screw holes are aligned through the entire assembly.

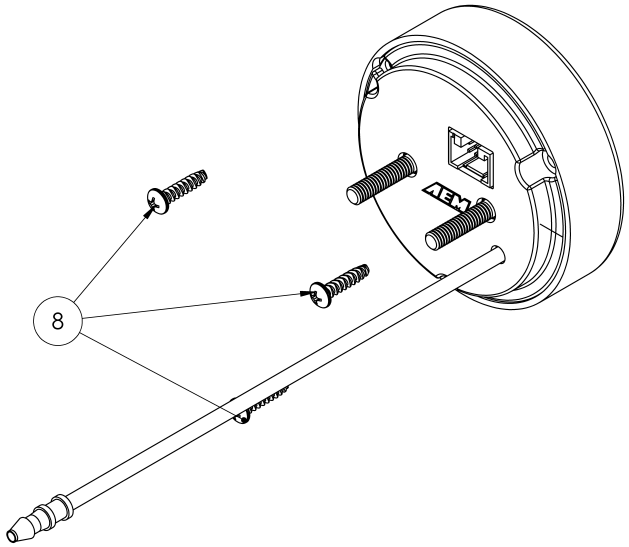

STEP 4 - Re-assemble and tighten screws to 2 in-lb (previously assembled bezel) or 3 in-lb (new bezel). Do not over-tighten!

© 2019 AEM Peformance Electronics

AEMnet (CAN bus) Output

WHITE WIRE WITH BLACK STRIPE = AEMnet+ / CANH
GREEN WIRE WITH BLACK STRIPE = AEMnet- / CANL

The AEMnet output is suitable for output to AEM devices such as the Dash Displays. The following CAN configuration and message definition information is provided below to facilitate interface with third-party devices.

Bus Termination
All AEMnet/CAN networks must be terminated to have an equivalent of approximately 60 Ohms of resistance. Generally, this means a 120 Ohm resistor connected in parallel to AEMnet+/AEMnet- (or CANH/CANL) at both physical ends of the bus run. The X-Series device does not have any internal termination and is intended to be connected to a pre-existing, properly terminated network. Please refer to the Bosch CAN2.0B specification for further detail.

bit rate	500	Kb/Sec
format	29	bit ID
transmit rate	20	Hz
terminating resistor	none	
endianness	big / Motorola	
DLC	8	

Message ID	0x000A0310

Byte	Bit	Bitmask	Label	Data Type	Scaling	Offset	Range
0-1	-	-	Boost Press	16 bit unsigned	0.01 PSIg / bit	0.0	0 to 655.35 PSIg
2-3	-	-	Over-boost Alarm Threshold	16 bit unsigned	0.01 PSIg / bit	0.0	0 to 655.35 PSIg
4-5	-	-	Boost Max	16 bit unsigned	0.01 PSIg / bit	0.0	0 to 655.35 PSIg
6-7	-	-	Wastegate Crack Press	16 bit unsigned	0.01 PSIg / bit	0.0	0 to 655.35 PSIg

Message ID	0x000A0311

Byte	Bit	Bitmask	Label	Data Type	Scaling	Offset	Range
0	-	-	Boost Control Output	8 bit unsigned	1 % / bit	0	0 to 255 %
1	-	-	Boost Control Scramble Duty	8 bit unsigned	1 % / bit	0	0 to 255 %
2	-	-	Boost Control Target A Duty	8 bit unsigned	1 % / bit	0	0 to 255 %
3	-	-	Boost Control Target B Duty	8 bit unsigned	1 % / bit	0	0 to 255 %
4	-	-	Boost Scramble Timeout	8 bit unsigned	0.1 s / bit	0	0 to 25.5 s
5	4-7 (MSB)	16	Reserved	-	-	-	-
	3	8	Boost Solenoid Status	Boolean	0 = "OK", 1 = "Error"	0	0/1
	2	4	Over-boost Status	Boolean	0 = "OK" , 1 = "Over-boost"	0	0/1

© 2019 AEM Peformance Electronics

	1	2	Over-boost Shutdown Status	Boolean		0 = "OK", 1 = "Shutdown"	0	0/1
	0 (LSB)	0	Scramble Boost Input State	Boolean		0 = "Off", 1 = "On"	0	0/1
6-7	-	-	Reserved	-		-	-	-

FAQ / Troubleshooting

What are the minimum wiring connections needed to use the gauge?
Switched/fused 12V (RED) and power ground (BLACK) must be supplied to the 10 pin connector. The boost solenoid needs to be connected to the 10 pin connector as well. See the Wiring Installation Diagram for more details. Any unused wires may be secured and fastened away for future use.

The LEDs flashes and the center digits display "ErS".
The boost controller gauge detected a short or disconnect in the boost solenoid circuit. Check the wiring and correct any issues.

Why is my gauge not showing boost or vacuum?
The gauge is not connected to a source that sees manifold pressure.

What is a good source for manifold pressure?
The best source would be a port on the intake manifold. Alternatively, the manifold boost hose can be tee off of the existing vacuum hoses. Ensure there are no flow control devices that can interfere with the pressure reference, e.g. check valves, solenoids.

My gauge is displaying boost pressure but the solenoid is not activating.
Ensure that the boost controller gauge is in either mode A or mode B. Boost solenoid control is disabled in mode Off.

How do I know what mode the gauge is in?
The gauge will display the mode when it is turned on. Press the A button to display the mode during operation.

Why is the boost is not increasing?
Make sure the gauge is in mode A or B and that the Wastegate Crack Pressure "oPP" and the boost settings are configured. Check the solenoid plumbing.

What does spring setting mean? What should I set this to?
Spring setting or Wastegate Crack Pressure "oPP" is the boost pressure at which the Wastegate starts to open. This value can be adjusted to reduce lead in boost spikes or reduce spool up time. It is recommended that this setting is set 2-3 PSI below the actual crack pressure.

What do I have to set this gauge to in order to make x boost?
Every setup will act differently due to differences in engine size, turbo size, and other set up aspects. Hence, there is no option to just input a boost target. Try the following. Set the Wastegate Crack Pressure "oPP". As a safety net, set the alarm "ALA" to the target boost. Increase either boost setting A or B under load until the target boost is achieved. Set the gauge to the corresponding mode and confirm that the boost target is being met under driving conditions.

Can I extend the wires in my power harness?
Yes, but match the existing wire gauge use of proper crimping/soldering techniques is required.

Can I extend the vacuum line?
It is not recommended that the vacuum line is extended beyond the length of the hose already supplied, 10FT. The shorter the hose between the gauge and the manifold, the better.

© 2019 AEM Peformance Electronics

Specifications

Dimensions	diameter (bezel)	2.40 / 61	in / mm
	diameter (cup)	2-1/16 / 52	in / mm
	depth (incl. bezel)	0.825 / 21	in / mm
	depth (cup only)	0.200 / 5	in / mm
Supply Voltage	min	7	VDC
	max	18	VDC
Supply Current (13.8V)	nominal	1.5	A
	peak	3	A
Lowside Current	max	1.5	A
Operating Temperature	min	-4 / -20	degF / degC
	max (16V Supply)	185 / 85	degF / degC
Operating Pressure	vacuum	-29	inHg
	max boost	80	PSI
CAN 2.0B Output	bit rate	500	Kb/Sec
	format	29	bit ID
	transmit rate	20	Hz
	terminating resistor	none	
	endianness	big / Motorola	
	Message/Arbitration ID	0x000A0310-0x000A0311	
	DLC	8	

12 Month Limited Warranty

AEM Performance Electronics warrants to the consumer that all AEM ELECTRONICS products will be free from defects in material and workmanship for a period of twelve months from date of the original purchase. Products that fail within this 12-month warranty period will be repaired or replaced when determined by AEM that the product failed due to defects in material or workmanship. This warranty is limited to the repair or replacement, at AEM's discretion, of the AEM Electronics part. In no event shall this warranty exceed the original purchase price of the AEM ELECTRONICS part nor shall AEM ELECTRONICS be responsible for special, incidental or consequential damages or cost incurred due to the failure of this product.

Warranty claims to AEM ELECTRONICS must be transportation prepaid and accompanied by dated proof of purchase. This warranty applies only to the original purchaser of product and is non-transferable. All implied warranties shall be limited in duration to the said 12-month warranty period. Improper use or installation, accident, abuse, unauthorized repairs or alterations voids this warranty.

AEM ELECTRONICS disclaims any liability for consequential damages due to breach of any written or implied warranty on all products manufactured by AEM ELECTRONICS.

Warranty returns will only be accepted by AEM ELECTRONICS when accompanied by a valid Return Merchandise Authorization (RMA) number. Product must be received by AEM ELECTRONICS within 30 days of the date the RMA is issued.

Please note that before AEM ELECTRONICS can issue an RMA for any electronic product, it is first necessary for the installer or end user to contact the tech line at 1-800-423-0046 to discuss the problem. Most issues can be resolved over the phone. Under no circumstances should a system be returned, or an RMA requested before the above process transpires. AEM ELECTRONICS will not be responsible for products that are installed incorrectly, installed in a non-approved application, misused, or tampered with.

Fuel Pumps installed with incorrect polarity (+&- wires crossed) will not be warranted. Proper fuel filtration before and after the fuel pump are essential to fuel pump life. Any pump returned with contamination will not be warranted.

Any AEM ELECTRONICS product, excluding discontinued products, can be returned for repair if it is out of the warranty period. There is a minimum charge for inspection and diagnosis of AEM ELECTRONICS parts which are out of warranty. Parts used in the repair of AEM ELECTRONICS electronic components will be extra. AEM ELECTRONICS will provide an estimate of repairs and must receive written or electronic authorization before repairs are made to the product.

Need additional help? Contact the AEM Performance Electronics tech department at 1-800-423-0046 or email us at tech@aemelectronics.com.

© 2019 AEM Peformance Electronics