OIL PAN
P/N 302-3

Instruction Sheet 199R11351

CONGRATULATIONS on your purchase of a Holley® **LS Retro-fit Oil Pan**! We feel that you have purchased the finest performance oil pan manufactured today. Should you need information or parts assistance, please contact our Technical Service Department at 1-866-464-6553 or 1-270-781-9741, Monday through Friday, 8 a.m. to 6 p.m. CST. Please have the part number of the product you purchased on hand when you call.

WARNING! These instructions must be read and fully understood before beginning installation. Failure to follow these instructions may result in poor performance, vehicle damage, personal injury, or death. If these instructions are not fully understood, installation should not be attempted.

INTRODUCTION:

Holley® Performance Products has written this instruction sheet for the installation of the **LS Retro-fit Oil Pan**. This instruction sheet contains all the information needed to install the oil pan. Please read all the **WARNINGS** and **NOTES**, as they contain valuable information that can save you time and money. Holley® Performance Products cannot and will not be responsible for any alleged or actual engine or other damage, or other conditions resulting from misapplication of the oil pan described herein. However, it is our intent to provide the best possible products for our customer; products that perform properly and satisfy your expectations.

APPLICATIONS:

302-3 – The Holley® P/N 302-3 LS Retro-fit oil pan is designed specifically for LS engine retrofit in 1967-69 F-body, 1982-92 F-body, 1968-74 X-body, 1964-72 A-body, 1978-88 A/G-body, 1979-2004 Ford Mustangs, or 1979-1986 Mercury Capri II vehicles. The 302-3 oil pan may also service other popular muscle/classic car and truck chassis where more engine-to-chassis clearance is required near the front half of the oil pan.

IMPORTANT APPLICATION NOTES:

- This pan provides OEM fitment and oil filter mounting provisions.
- This pan is not intended to be used with engines that originally utilized a dry sump system.
- 302-3 may not be used on LS7 engines or engines with a stroke longer than 4.00”.
- You have two options for which windage tray to use:

  1) GM “F-body” windage tray, GM P/N 12558253. A modification to the windage tray is required to provide clearance to the pick-up tube. See the instructions showing the windage tray modifications required.

  OR

  2) A full-length windage tray may be used if the tray is shortened and also cut to provide clearance to the pick-up tube. See the instructions showing the windage tray modifications required.

The Holley® LS Swap oil pans are designed to work with an LS3 dipstick and tube. Below are the part numbers:

- LS Dipstick – GM P/N 12669528
- LS tube – GM P/N 12625031

NOTE: There are LS engine applications that have a plug installed in the dipstick hole location to be used with this oil pan. This plug will need to be removed before the oil pan is installed on the engine to allow the installation of the proper dipstick tube.

PAN CAPACITIES:

	302-3
Sump Oil Capacity –	5.6 Qts
Total Oil Capacity w/ stock filter –	6.1 Qts

PARTS NEEDED:

- Oil Pan Gasket (Mr. Gasket P/N 6665G, GM® 12612350, or equivalent)
- High Quality RTV sealer
- Oil
- Oil Filter (AC Delco® PF48 or PF48E, Mobile M1-113, Wix 57060, K&N HP-1017, or equivalent)
- Oil Pan Bolts (2 required – GM #12554990)

REMOVAL:

1. Drain the engine oil. Remove oil filter.
2. Remove the starter motor.
3. Disconnect the oil level sensor electrical connector (if equipped).
4. Remove the oil level sensor from the oil pan and set aside. The sensor will not be utilized in the Holley® pan.
5. Remove the RH transmission cover and bolt.
6. Remove the LH transmission cover and bolt.
7. Remove the bottom two transmission bellhousing bolts.
8. Remove the oil pan bolts.
9. Rotate the oil pan until it can be removed from around the oil pump pickup screen. Removal of the oil pan may not be possible with the engine in the vehicle).

NOTE: Holley® does not recommend or condone the use of the old pan gasket. A new gasket is highly recommended.

WARNING! Use extreme care when drilling the oil pan rivets to not gouge, score or damage the oil pan gasket.

10. If reusing the oil pan gasket, carefully drill out the oil pan gasket rivets (x2) if necessary (**Figure 1**).

Figure 1

11. Remove oil pan gasket.
12. Remove the oil pump pickup screen retaining bolt and nut.
13. Remove the oil pump pickup screen and O-ring, discard O-ring and set the pickup aside as it will not be re-used.
14. While the oil pan is removed, check the dipstick hole on the right side of the engine below cylinder #6 to assure that there is no plug installed and that the dipstick tube will fit in the hole.

IMPORTANT: All gasket surfaces should be free of oil or other foreign material during assembly. Inspect the engine block oil gallery passages to make sure they are free from any debris or restrictions.

IMPORTANT: The oil pan on LS engines is a structural member. The alignment of the pan is critical to provide the proper mounting points for the transmission bellhousing. The rear of the oil pan must never protrude from the rear of the block. The rear of the block and oil pan are to be flush (Figure 2).

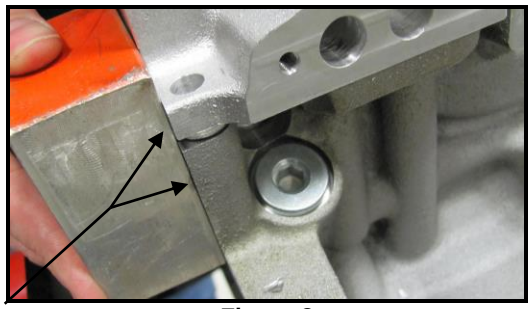

Figure 2

IMPORTANT: It is advisable to wash all of the new parts well before installing to remove any dirt or debris from the packing and shipping process.

IMPORTANT: It is advisable to test-fit the oil pan to the engine before installation to ensure that the crankshaft and connecting rods clear the windage tray, oil pump pick-up screen, and the oil pan, making a full revolution of the rotating assembly by hand.

IMPORTANT: It is advisable to mock up the engine and oil pan in the intended vehicle to ensure there is no contact of the pan to the frame or cross-members.

WINDAGE TRAY MODIFICATIONS AND INSTALLATION:

IMPORTANT: A modification to the windage tray must be made to provide clearance for both the oil pickup tube and a portion of the oil pan. The following drawings show how to modify the tray depending on which type you have. After modifications are made thoroughly clean, dry and reinstall the windage tray to the engine.

Modifications required for full length windage tray

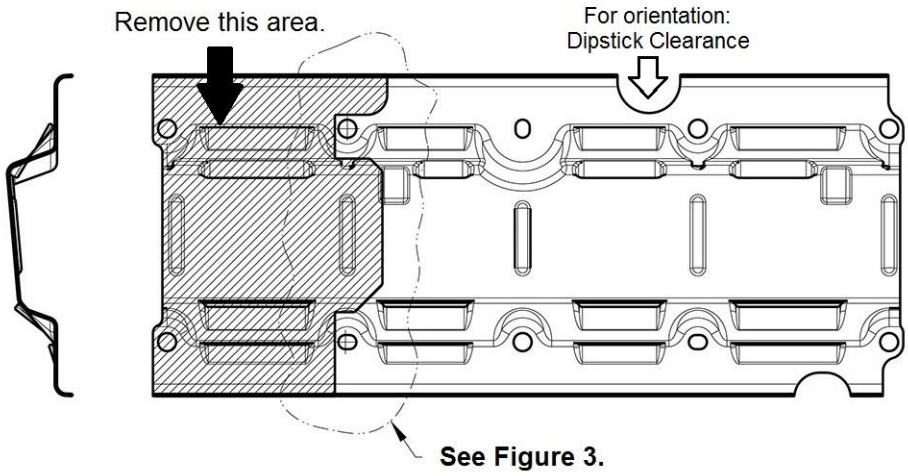

Modifications required for F-body windage tray - GM P/N 12558253

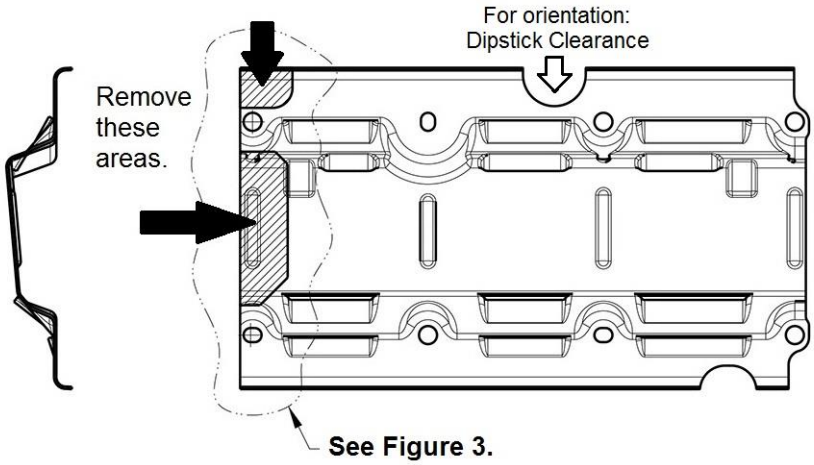

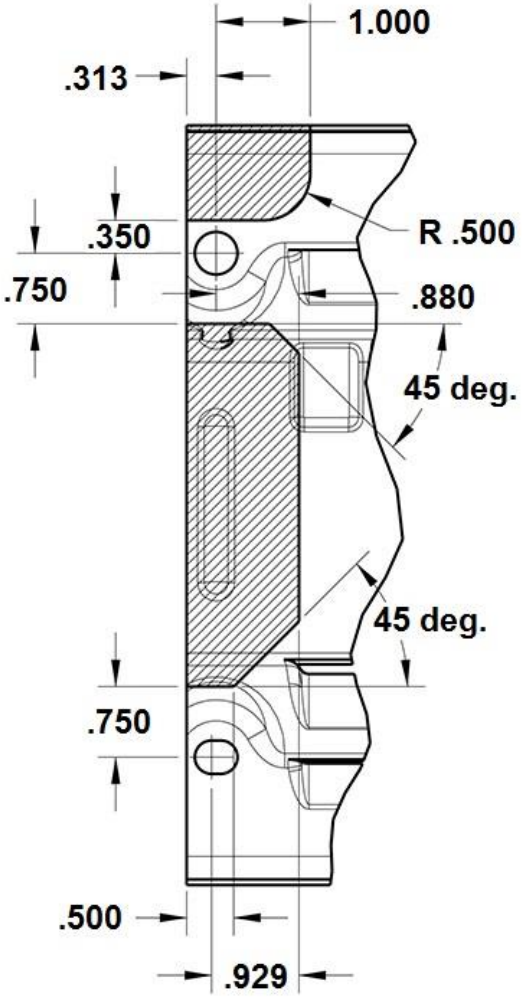

Figure 3

INSTALLATION:

1. Remove the new Holley® oil pan, parts kit, pickup screen and baffle from the box.
2. Install the supplied O-ring onto the oil pump pickup screen assembly and lubricate with clean engine oil (**Figure 4**).

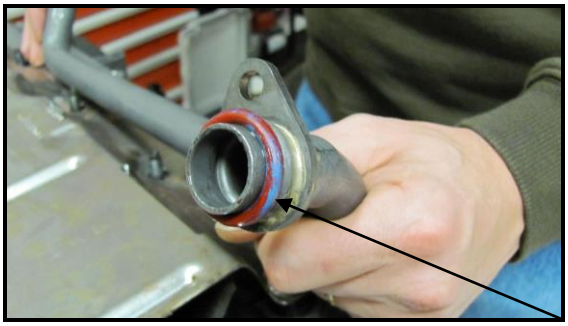

Figure 4

3. Install the new Holley® oil pump pickup screen assembly ensuring that oil pump pickup screen tube is pushed completely into the oil pump before tightening the bolts (**Figure 5**). Do not allow the bolts to pull the tube into the pump. Attach using the two M6 x 16mm long flanged socket head capscrews included in the installation parts kit.

NOTE: Ensure the O-ring has not been pinched during installation.

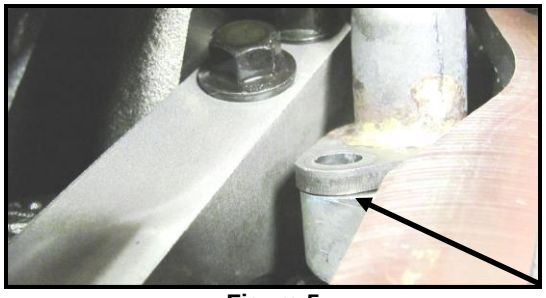

Figure 5

4. Install the oil pump screen nut and bolt(s). You may need to slightly bend the tab to provide precise alignment of the hole in the tab to the mounting stud.

5. Rotate the crankshaft by hand to ensure there is adequate clearance between the pickup tube brace, oil deflector, and the crankshaft counterweights.

6. Tighten the oil pump pickup screen bolt(s) to 106 in./lbs. and the nut to 18 ft./lbs**.**

7. Pre-assemble the oil pan.

8. Apply a drop of blue Loctite® to the threads of the (x4) supplied 1/4-20 x 1/2 long cap screws and use them to install the baffle into the oil pan. Torque the (x4) baffle bolts to 8-10 ft./lbs.

9. Install the supplied oil passage cover, gasket and M6 x 1.0 x 30mm long bolts to the oil pan just above the oil filter. Tighten the oil passage cover bolts to 106 in./lbs.

10. Install the new oil pan gasket to the oil pan and install the oil pan bolts to the pan through the gasket. The gasket is designed to hold the bolts in place.

11. Apply a 5mm bead of RTV sealant 20mm long to the engine block (**Figure 6**) directly onto the tabs of the front cover gasket that protrude into the oil pan surface.

Figure 6

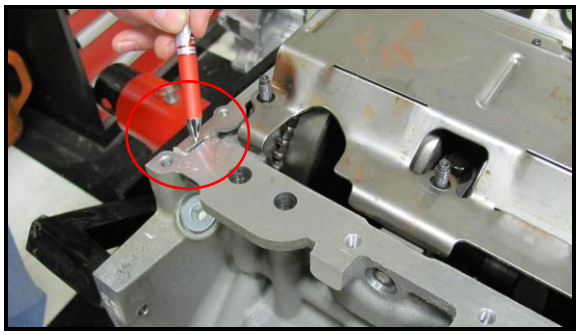

Figure 7

12. Apply a 5mm bead of RTV sealant 20mm long to the engine block (**Figure 7**) directly onto the tabs of the rear cover gasket that protrude into the oil pan surface.

13. Install the oil pan assembly to the engine block.

14. Snug all the oil pan bolts by hand (do not overtighten).

15. Install the two lower transmission bellhousing bolts until snug (do not overtighten).

16. Tighten the oil pan to block and oil pan to front cover bolts to 18 ft./lbs. (work from the center out).

17. Tighten the oil pan to rear cover bolts to 106 in./lbs.

18. Tighten the two transmission bellhousing-to-oil pan bolts to 37 ft./lbs. for either a manual or an automatic transmission.

19. Install the LH side transmission cover and bolt. Torque to 106 in./lbs. Install the RH side transmission cover and bolt. Torque to 106 in./lbs.

20. Install the supplied oil pan drain plug and tighten to 18 ft./lbs.

21. Install the supplied oil filter adapter and tighten to 40 ft./lbs.

22. Before installing the new oil filter, apply a thin film of oil to the filter gasket. Install the new engine oil filter and follow the manufacturer's recommendation for tightening procedures.

23. Fill the crankcase with the proper quantity and grade of oil.

24. Be careful not to overfill with oil.

25. Start the vehicle and check for leaks and adequate oil pressure. Use the original dipstick to verify the oil level. This should read full after 6 quarts of oil with a new filter.

Holley® Technical Support
270-781-9741
www.holley.com

© 2017 Holley Performance Products, Inc. All rights reserved.

199R11351
Date: 7-7-17